Clamping Plates

Zinc Die-Cast, for Digital Position Indicators EN 9053 / EN 9153

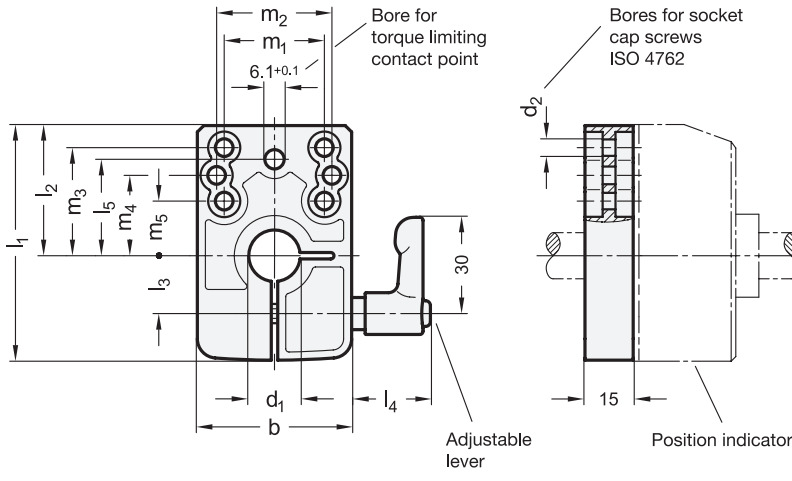

Metric

Metric table

Dimensions in: millimeters / inches

1 b	2 d_1 F9 Bore					d_2	l_1	l_2	l_3	l_4	l_5	m_1	m_2	m_3	m_4	m_5
48 1.89	B 12	B 14	B 15	B 16	B 20	5.5 0.22	73 2.87	40.5 1.59	18 0.71	24.5 0.96	30 1.18	34 1.34	36 1.42	33.6 1.32	25 0.98	17 0.67

Specification

Clamping plate
Zinc die-cast
Powder coated
Black, textured finish

Straight adjustable lever GN 302.1
- Handle
  Zinc die-cast
  Powder coated
  Black, RAL 9005, textured finish
- Insert / Retaining screw
  Stainless steel AISI 303

RoHS

Clamping plates GN 9053.6 are used in connection with digital position indicators EN 9053 and EN 9153. The mounting holes support typical hole patterns.
After installation and adjustment of the spindles, they can easily be clamped and locked.
At the same time these plates include bore size Ø 6.1 mm to accept the torque limiter for the position indicator.
The clamping plate can be installed so that the adjustable lever is positioned either to the right or the left.

see also...	Page
EN 9053 Digital Position Indicators (Electronic)	QVX
EN 9153 Digital Position Indicators (Electronic, with Data Transmission via Radio Frequency)	QVX

Technical Information

ISO Fundamental Tolerances	QVX
Stainless Steel Characteristics	QVX

How to order

GN 9053.6-48-B12 (1 = 48, 2 = B12)

1	Width b
2	Bore d_1

WARNING: Cancer and Reproductive Harm — www.P65Warnings.ca.gov