GN 162.3 | Base Plate Connector Clamps

Aluminum / Stainless Steel, with 2 Mounting Holes

JW WINCO® A Ganter Company

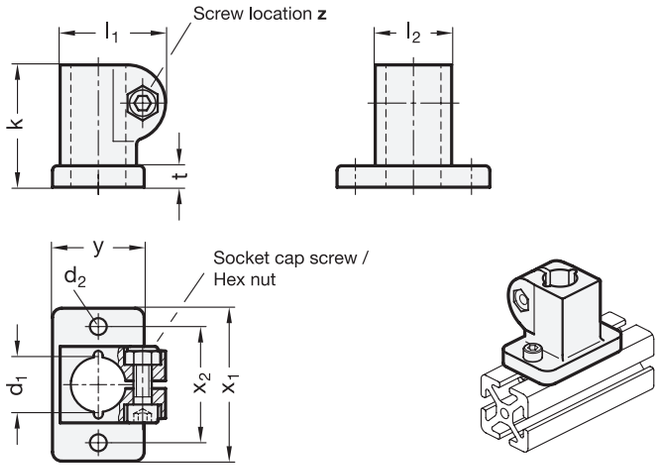

Metric

SS Stainless Steel

2 Identification no.

2 With stainless steel socket cap screw DIN 912

Metric table

1

Dimensions in: millimeters - *inches*

d_1 Bore Aluminum	Stainless steel	d_2	k Clamping length	l_1	l_2	t	x_1	x_2	y	z Screw location for screw size
B 10	-	5.5 *0.22*	40 *1.57*	34.5 *1.36*	25 *0.98*	7 *0.28*	50 *1.97*	38 *1.50*	30 *1.18*	M6-20
B 12	B 12	5.5 *0.22*	40 *1.57*	34.5 *1.36*	25 *0.98*	7 *0.28*	50 *1.97*	38 *1.50*	30 *1.18*	M6-20
B 14	B 14	5.5 *0.22*	40 *1.57*	34.5 *1.36*	25 *0.98*	7 *0.28*	50 *1.97*	38 *1.50*	30 *1.18*	M6-20
B 15	B 15	5.5 *0.22*	40 *1.57*	34.5 *1.36*	25 *0.98*	7 *0.28*	50 *1.97*	38 *1.50*	30 *1.18*	M6-20
B 16	B 16	5.5 *0.22*	40 *1.57*	34.5 *1.36*	25 *0.98*	7 *0.28*	50 *1.97*	38 *1.50*	30 *1.18*	M6-20
B 18	B 18	5.5 *0.22*	40 *1.57*	34.5 *1.36*	25 *0.98*	7 *0.28*	50 *1.97*	38 *1.50*	30 *1.18*	M6-20
-	B 20	5.5 *0.22*	40 *1.57*	34.5 *1.36*	25 *0.98*	7 *0.28*	50 *1.97*	38 *1.50*	30 *1.18*	M6-20

Specification

3

- Body
  Aluminum
  - Powder coated
    Black, RAL 9005, textured finish — **SW**
  - Plain, matte shot-blasted finish — **BL**
- Body
  Stainless steel AISI CF-8 — **NI**
  Matte shot-blasted finish
- Socket cap screws DIN 912
  Stainless steel AISI 304
- Hex nuts DIN 985
  Stainless steel AISI 304
  Self-locking via polyamide ring
- *Stainless Steel Characteristics → page 2143*
- RoHS compliant

Information

The clamping bore of base plate connector clamps GN 162.3 is mechanically machined and designed for construction tubes GN 990 or DIN 2391, DIN 2395 and DIN 2462.

Base plate connector clamps GN 162.3 can also be mounted to **profile systems**.

At the screw location **z**, the socket cap screw reduces the bore cross-section for clamping.

see also...

- *Product Family Standard Parts for Profile Systems → page 18*
- *Construction Tubes GN 990 → page 1836*
- *Base Plate Linear Actuator Connectors GN 162.1 → www.jwwinco.com*

How to order (Aluminum)		
1 2 3	1	Bore d_1
GN 162.3-B14-2-SW	2	Identification no.
	3	Finish

How to order (Stainless steel)		
1 2 3	1	Bore d_1
GN 162.3-B12-2-NI	2	Identification no.
	3	Material